Dual 100

Bicep Curl
Tricep Extension

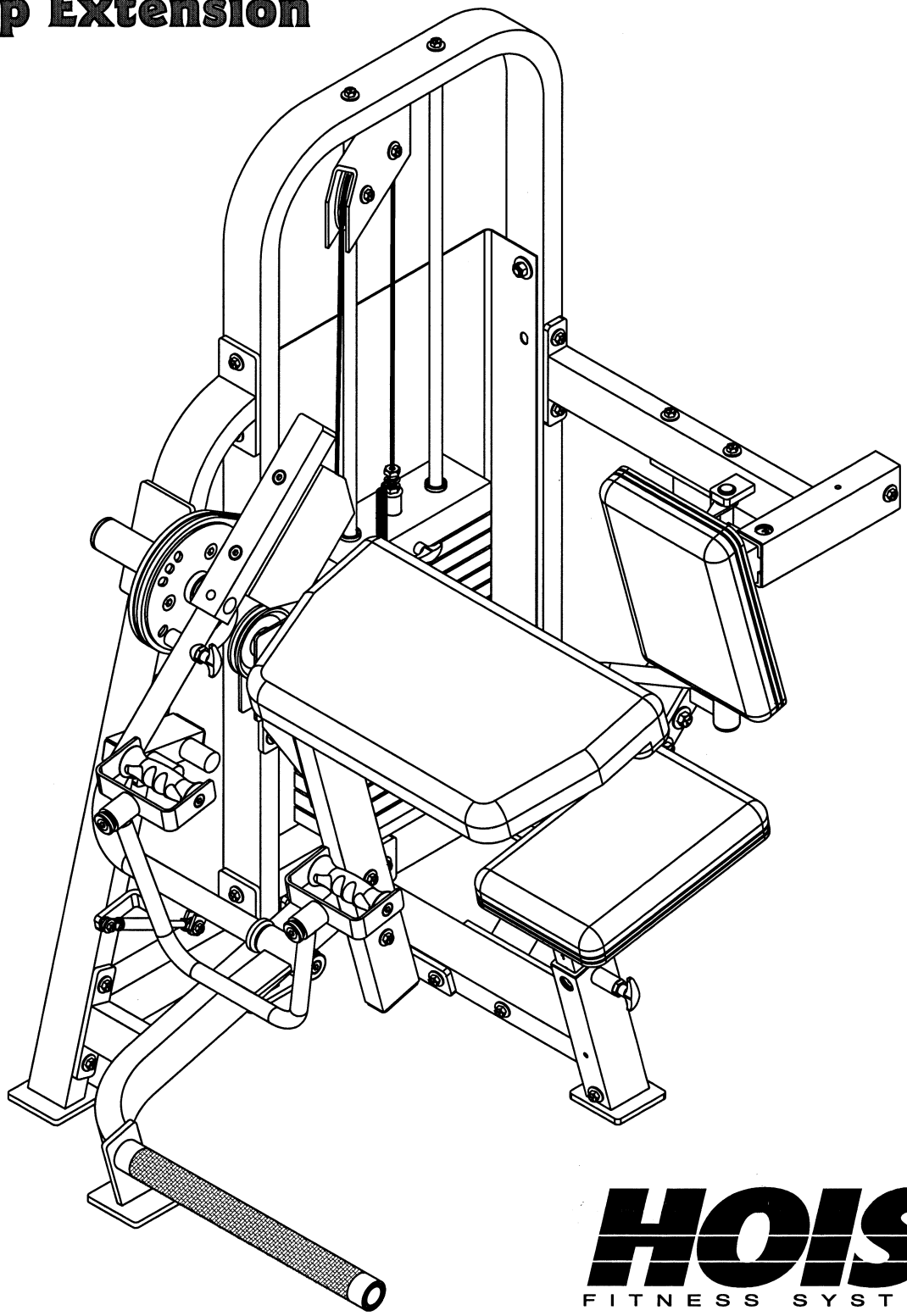

HOIST®
FITNESS SYSTEMS

CATALOG NUMBER
0700-002

ASSEMBLY INSTRUCTIONS

D100
Bicep Curl
Tricep Extension

CONTENTS

INSTRUCTIONS 2

FRAME ASSEMBLY 3

PARTS LISTING 9

HARDWARE LISTING 11

BOLT SIZING CHART 13

WASHER SIZING CHART 14

DECAL PLACEMENTS 15

WEIGHT RATIOS 20

WEIGHT TRAINING TIPS 21

WEIGHT TRAINING EXERCISE LOG 22

GENERAL MAINTENANCE INFORMATION 23

MAINTENANCE SCHEDULE 25

LIMITED WARRANTY 26

D100

Bicep Curl
Tricep Extension

INSTRUCTIONS

Before beginning assembly please take the time to read the instructions thoroughly. Please use the catalog in this manual to make sure that all parts have been included in your shipment. When ordering use the part number and description from the catalog. Use only Hoist replacement parts when servicing. Failure to do so will void your warranty and could result in personal injury.

Hoist equipment is designed to provide the smoothest, most effective exercise motion possible. After assembly, you should check all functions to ensure correct operation. If you experience problems, first recheck the assembly instructions to locate any possible errors made during assembly. If you are unable to correct the problem, call your authorized Hoist dealer. Be sure to have your serial number and this catalog when calling. When all parts have been accounted for, continue on to Step 2.

TOOLS REQUIRED

3/4" Combination Wrench and Socket

9/16" Combination Wrench and Socket

Hand Ratchet

Rubber Mallot

5/16 Allen and Socket

D100

Bicep Curl
Tricep Extension

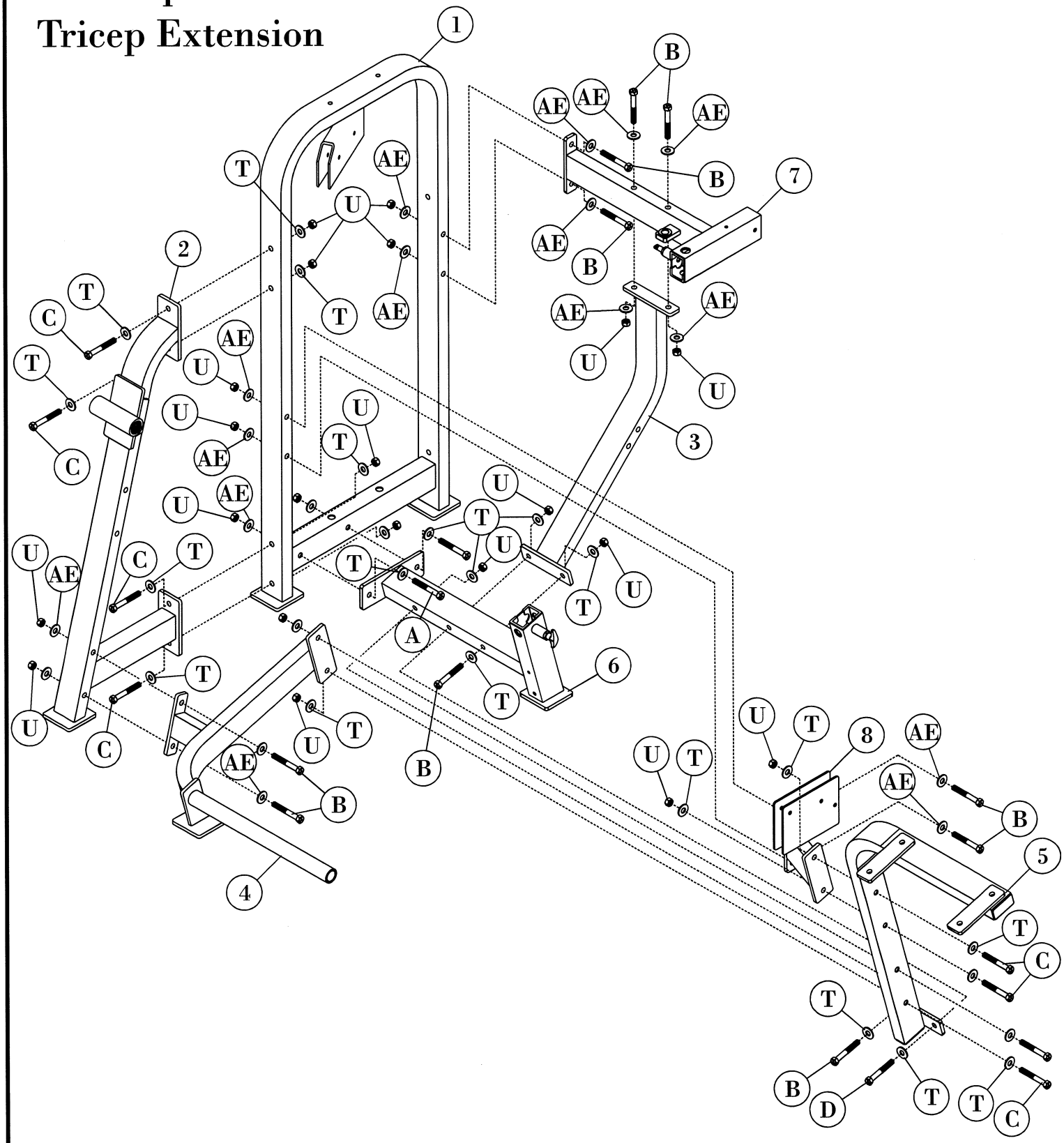

D100

Bicep Curl
Tricep Extension

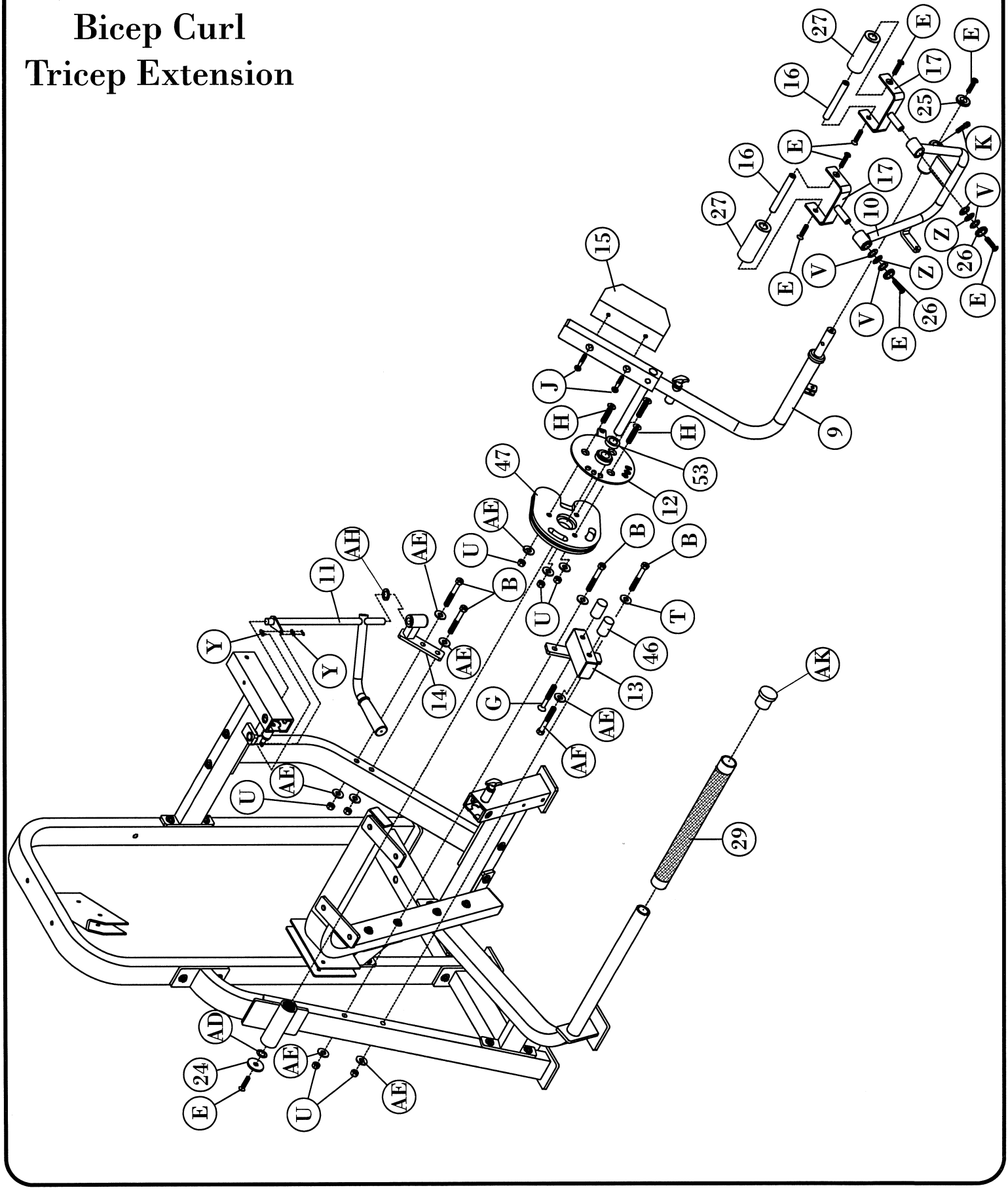

D100

Bicep Curl
Tricep Extension

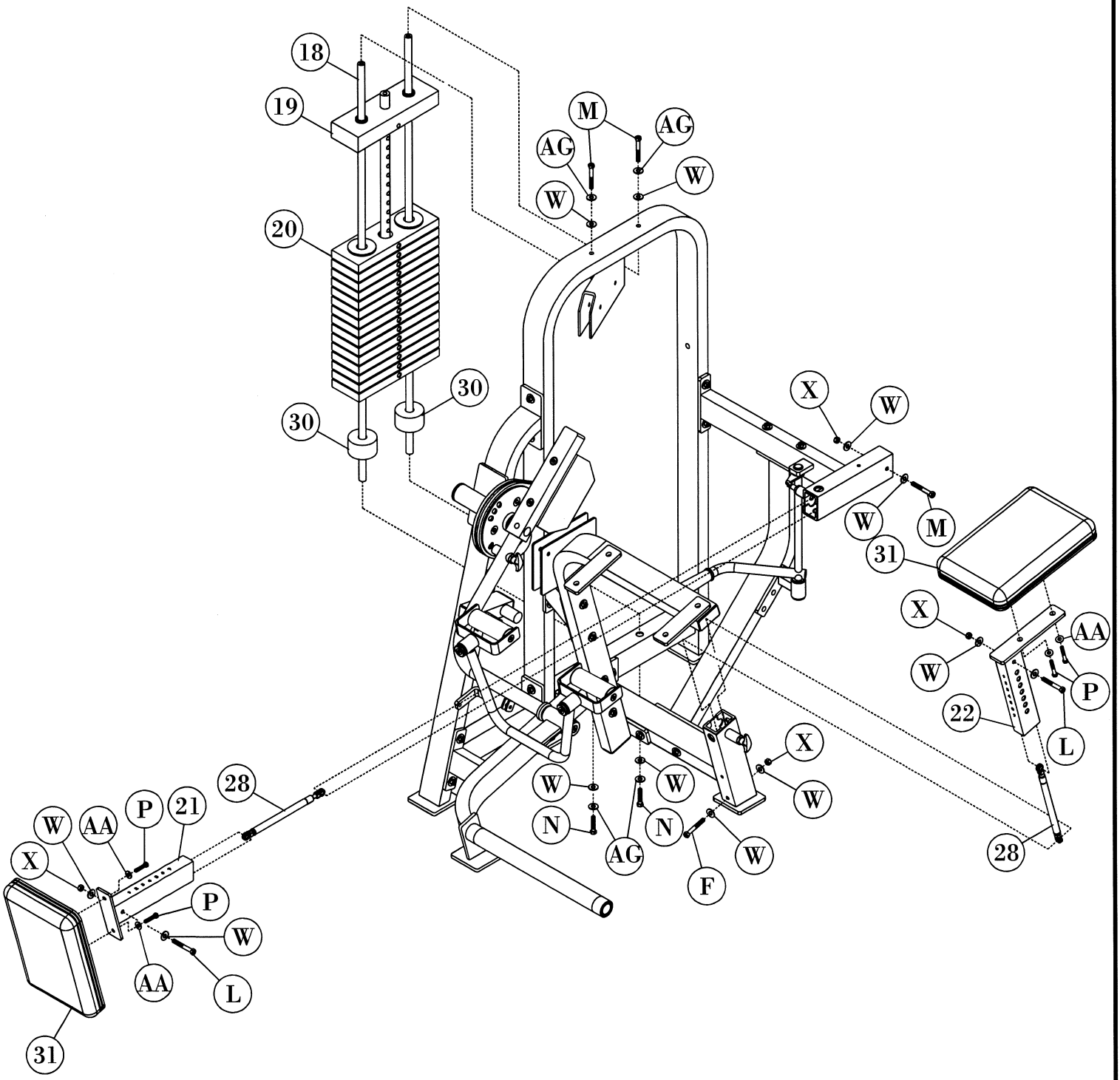

D100

Bicep Curl
Tricep Extension

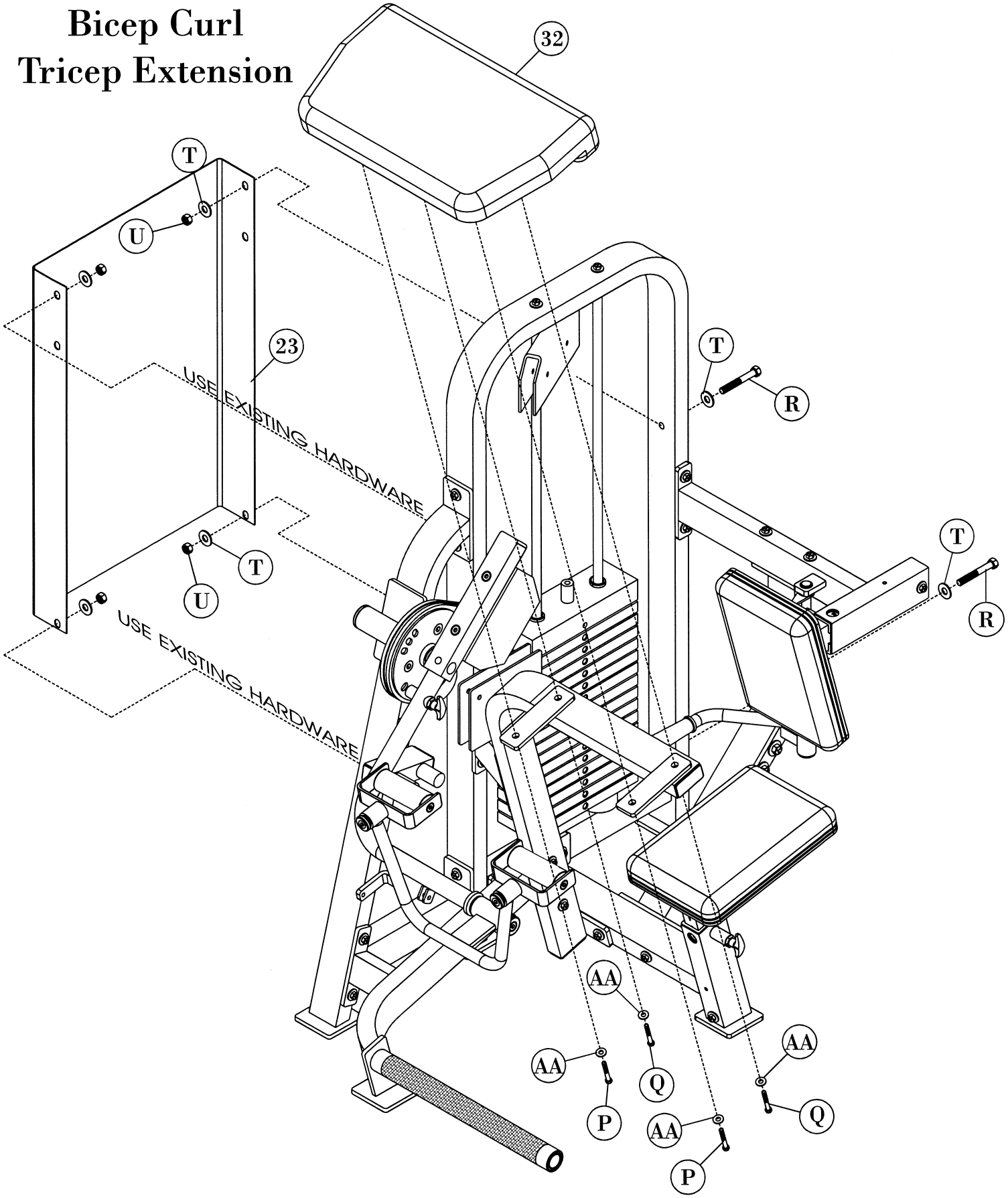

D100

Bicep Curl
Tricep Extension

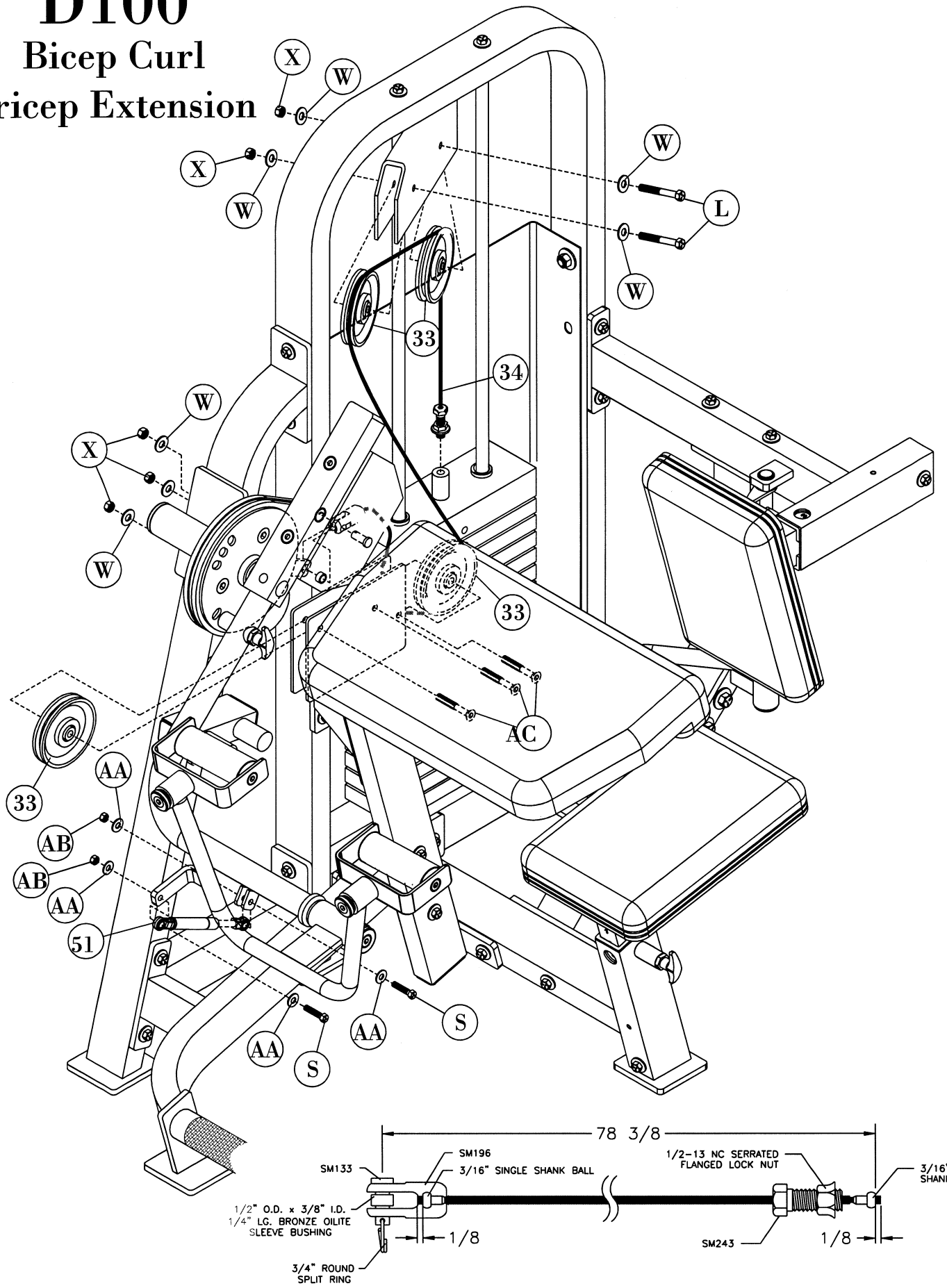

D100

Bicep Curl
Tricep Extension

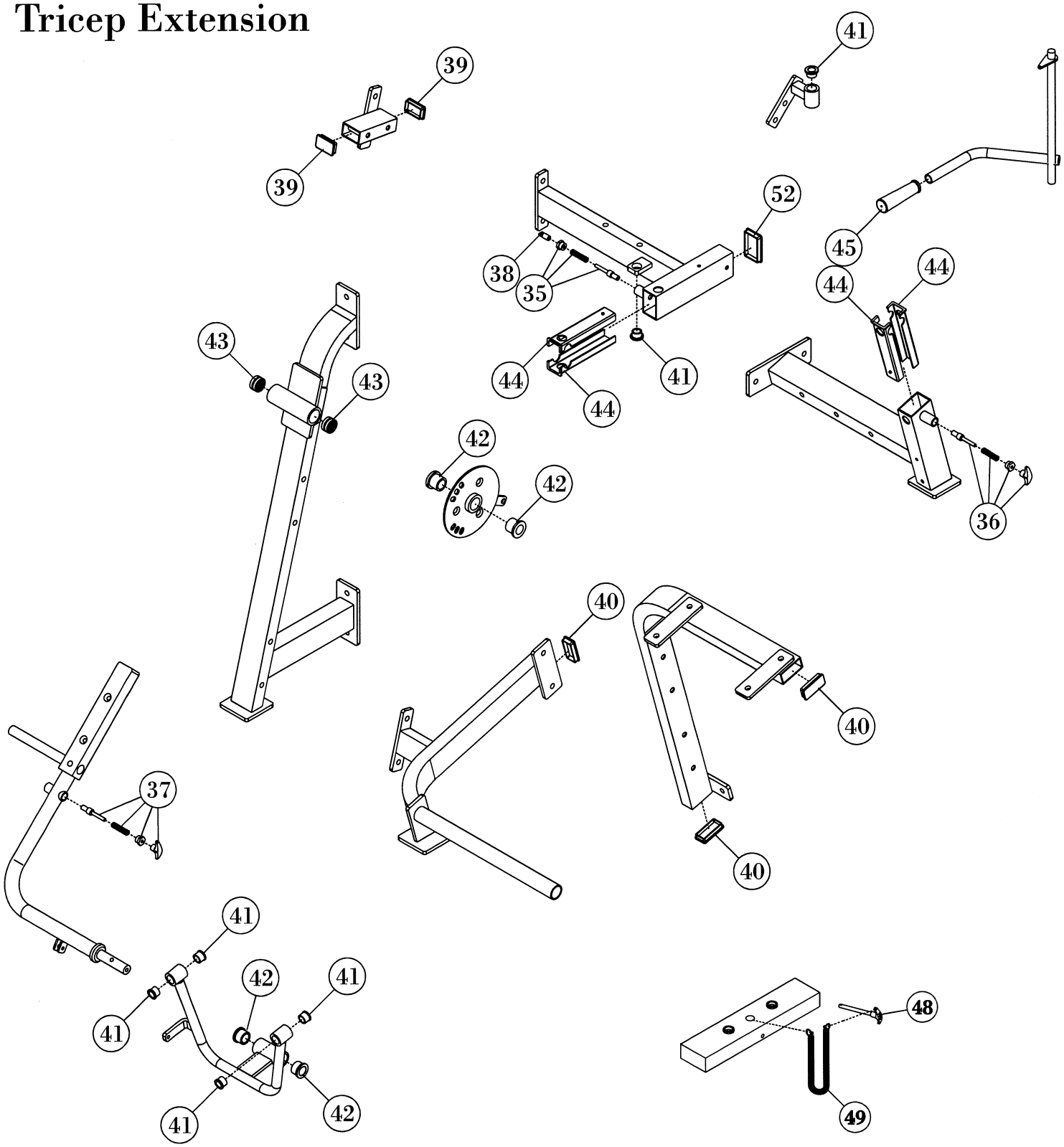

D100
PARTS LIST

Key No.	Qty.	Part Number	Description
1	1	35-SUB-D100-01	WEIGHTS CAGE
2	1	35-SUB-D100-02	PIVOT ASSEMBLY
3	1	35-SUB-D100-04	BACK PAD BRACE ASSEMBLY
4	1	35-SUB-D100-11	FOOT STABILIZER
5	1	35-SUB-D100-03	PAD MOUNT ASSEMBLY
6	1	35-SUB-D100-05	SEAT ADJUSTER ASSEMBLY
7	1	35-SUB-D100-12	BACK PAD ADJUSTER
8	1	35-SUB-D100-09	CROSSMEMBER PULLEY MOUNT
9	1	35-SUB-D100-06	ARM ASSEMBLY
10	1	35-SUB-D100-07	PIVOT FOR HANDLE ASSEMBLY
11	1	35-SUB-D100-16	REMOTE PULL-PIN HANDLE ASSEMBLY
12	1	35-SUB-D100-13	CAM ADJUST PLATE
13	1	35-SUB-D100-10	ARM STOP
14	1	35-SUB-D100-17	REMOTE PULL-PIN HANDLE PIVOT ASSY.
15	1	26-STD-SP232	28 LB COUNTERWEIGHT
16	2	26-STD-SM252	5" THREADED AXLE
17	2	35-SUB-D100-18	HANDLE ASSEMBLY
18	2	26-STD-SG114	GUIDE ROD
19	1	26-STD-SWTOP-5	TOP PLATE AND 16 HOLE STEM
20	15	26-STD-SW101	12 1/2 LB. INTERMEDIATE WEIGHT PLATE
21	1	35-SUB-D100-14	BACK PAD MOUNT
22	1	35-SUB-D100-15	SEAT PAD MOUNT
23	1	26-STD-SSH148	SHIELD
24	1	26-STD-SM238	3/8" FLATHEAD CAP, 2 DIA. x 1/4 THK.
25	1	26-STD-SM239	3/8" FLATHEAD CAP, 1 5/8 x 1/4 THK.
26	2	26-STD-SM240	3/8" FLATHEAD CAP, 1 3/8 x 1/4 THK.
27	2	26-STD-PLAS149	PLASTIC HANDLE, KNURLED
28	2	20-GSP-Y2505	GAS SPRING / SEAT
29	1	26-STD-PLAS146	20" KNURLED TUBE
30	2	19-WSB-1123	RUBBER WEIGHT STACK BUMPER

D100
PARTS LIST

Key No.	Qty.	Part Number	Description
31	2	26-STD-SU1015	10" x 15" PAD
32	1	26-STD-SU1224TW	12" x 24" WRAPPED EDGE, TAPERED PAD
33	4	18-PUL-412	4 1/2 PULLEY
34	1	10-SCA-SC7838	CABLE ASSEMBLY
35	1	26-STD-SM128	PULL PIN (SHORT) WITH OUT T HANDLE
36	1	26-STD-SM128	PULL PIN (SHORT) W/T HANDLE
37	1	26-STD-SM129	PULL PIN (LONG)
38	1	26-STD-SM209	PULL PIN TO CHAIN LINK CONNECTOR
39	2	16-CAP-112212	END CAP 1 1/2" x 2 1/2"
40	3	16-CAP-1123	END CAP 1 1/2" x 3"
41	6	14-OIL-34F	¾: I.D. FLANGED OILITE
42	4	14-TUR-1	TURCITE BUSHING
43	2	14-BRG-MR16N	BEARING
44	4	26-STD-PLAS125	E-Z GLIDE SLEEVE
45	1	19-GRP-78COMFORT	7/8" I.D. COMFORT GRIP
46	2	26-STD-PLAS133	STOP PIN
47	1	26-STD-SA116	CAM
48	1	26-STD-SM134	WEIGHT STACK PIN
49	1	10-LRD-12	COIL SPRING
51	1	20-GSP-Y2063	GAS SPRING / ARM
52	1	16-CAP-23	2" x 3" END CAP
53	1	026-01PL2130	PLASTIC SLEEVE

D100
HARDWARE LIST

Key No.	Qty.	Part Number	Description
A	2	11-HEX-123	1/2-13 x 3 HEX BOLT
B	14	11-HEX-124	1/2-13 x 4 HEX BOLT
C	8	11-HEX-12212	1/2-13 x 2 1/2 HEX BOLT
D	1	11-HEX-12412	1/2-13 x 4 1/2 HEX BOLT
E	8	11-FLA-381	3/8-16 x 1" FLATHEAD BOLT
F	1	11-HEX-38312	3/8-16 x 3 1/2 HEX BOLT
G	1	11-FLA-12334	1/2-13 x 3 3/4 FLATHEAD BOLT
H	3	11-FLA-121	1/2-13 x 1 FLATHEAD BOLT
J	2	11-FLA-38(16)212	3/8-16 x 2 1/2 FLATHEAD BOLT
K	1	11-SKT-3834	3/8-16 x 3/4 SOCKET HEAD BOLT
L	4	11-HEX-38(16)2	3/8-16 x 2 HEX BOLT
M	3	11-HEX-38(16)212	3/8-16 x 2 1/2 HEX BOLT
N	2	11-HEX-38(16)1	3/8-16 x 1 HEX BOLT
P	6	11-HEX-516(18)114F	5/16-18 x 1 1/4 FULL THREAD
Q	2	11-HEX-5163	5/16-18 x 3" HEX BOLT
R	2	11-HEX-12214	1/2-13 x 2 1/4" HEX BOLT
S	2	11-HEX-516114	5/16-18 x 1 1/4 HEX BOLT
T	28	13-FLT-12	1/2 FLAT WASHER
U	30	12-LOK-12T	1/2-13 THIN LOCK NUT
V	4	14-TBW-34	THRUST WASHER 3/4"
W	22	13-FLT-38	3/8" FLAT WASHER
X	9	12-LOK-38	3/8-16 LOCK NUT
Y	1	20-LNK-CONN43	CHAIN MASTER LINK
Z	2	14-BRG-THRUST34	THRUST BEARING
AA	12	13-FLT-516	5/16 FLAT WASHER
AB	2	12-LOK-516	5/16 LOCK NUT
AC	3	11-FLA-382	3/8-16 x 2 FLATHEAD BOLT
AD	1	14-TWB-1	THRUST WASHER 1"
AE	26	13-FLT-12SAE	1/2" SAE FLAT WASHER
AF	1	11-HEX-12312	1/2-13 x 3 1/2 HEX BOLT
AG	4	13-LOK-38	3/8" LOCK WASHER

D100
HARDWARE LIST

Key No.	Qty.	Part Number	Description
AH	1	14-TBW-34	3/4" THRUST WASHER
AK	1	26-STD-PLAS183	1 1/4" END CAP

D100

Bicep curl
Tricep Extention

BOLT SIZING CHART

5/16" HEX BOLT

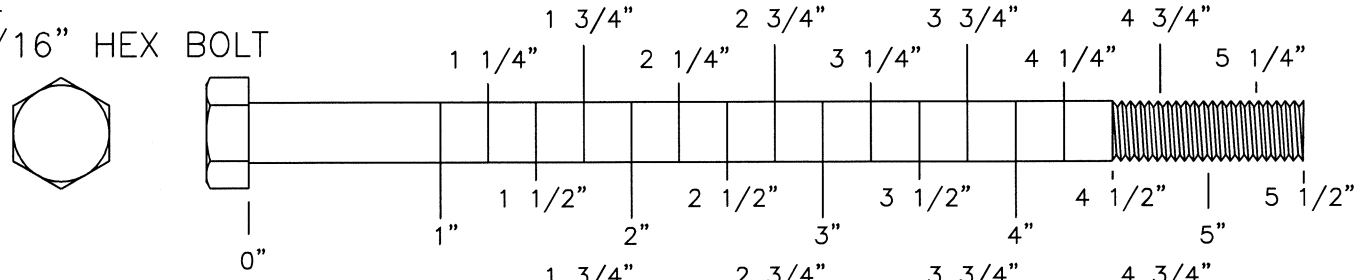

3/8" HEX BOLT

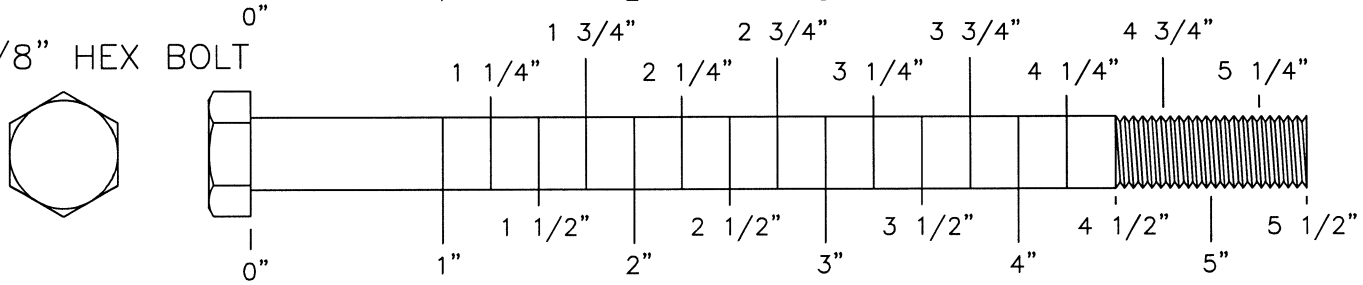

1/2" HEX BOLT

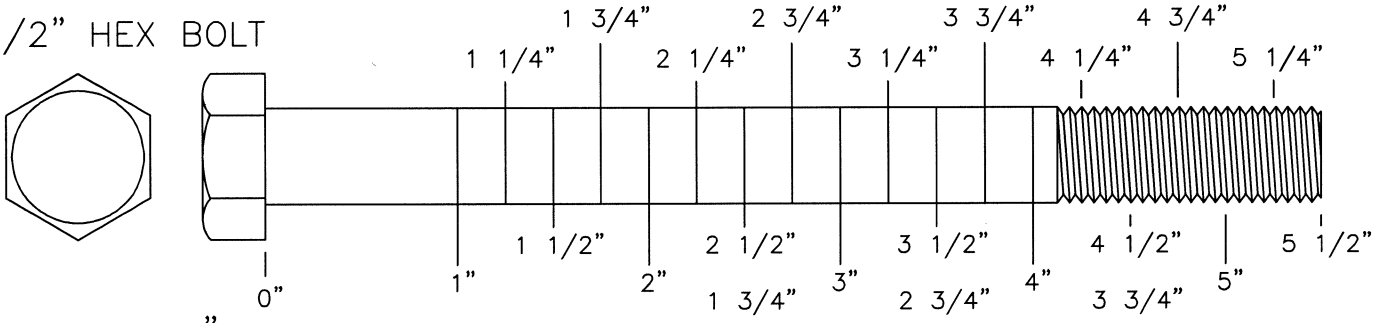

1/2" SHOULDER BOLT

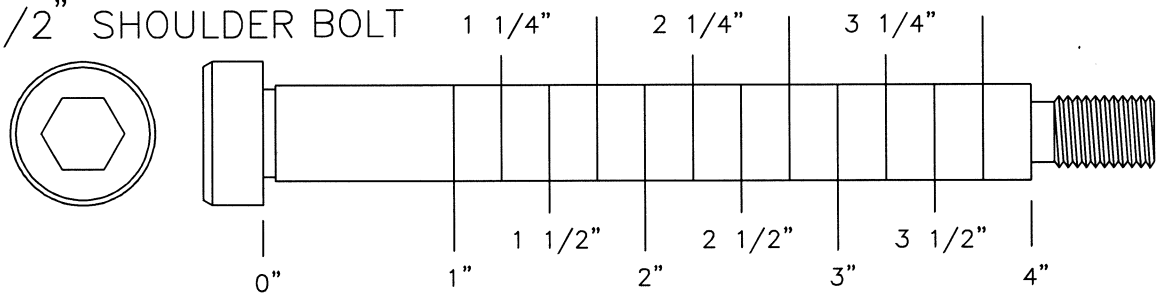

1/4" HEX BOLT

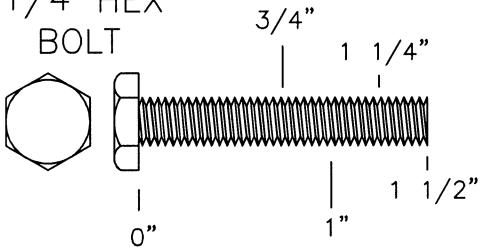

3/8" SOCKET CAP SCREW

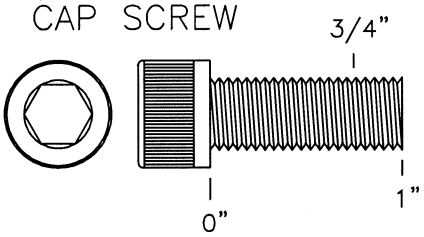

3/8" BUTTON HEAD CAP SCREW

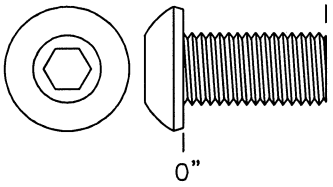

3/8" FLATHEAD SOCKET CAP SCREW

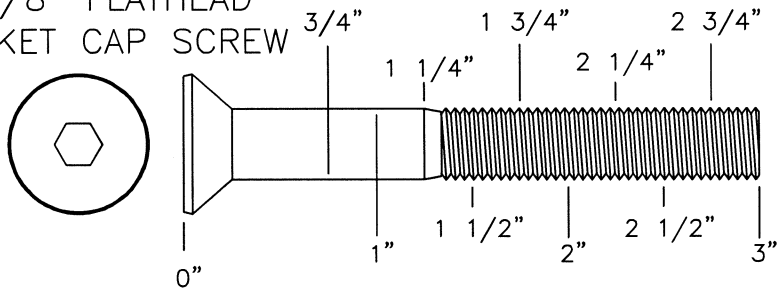

1/2" FLATHEAD SOCKET CAP SCREW

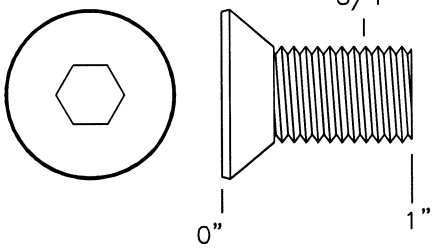

D100

Bicep curl
Tricep Extention

WASHER SIZING CHART

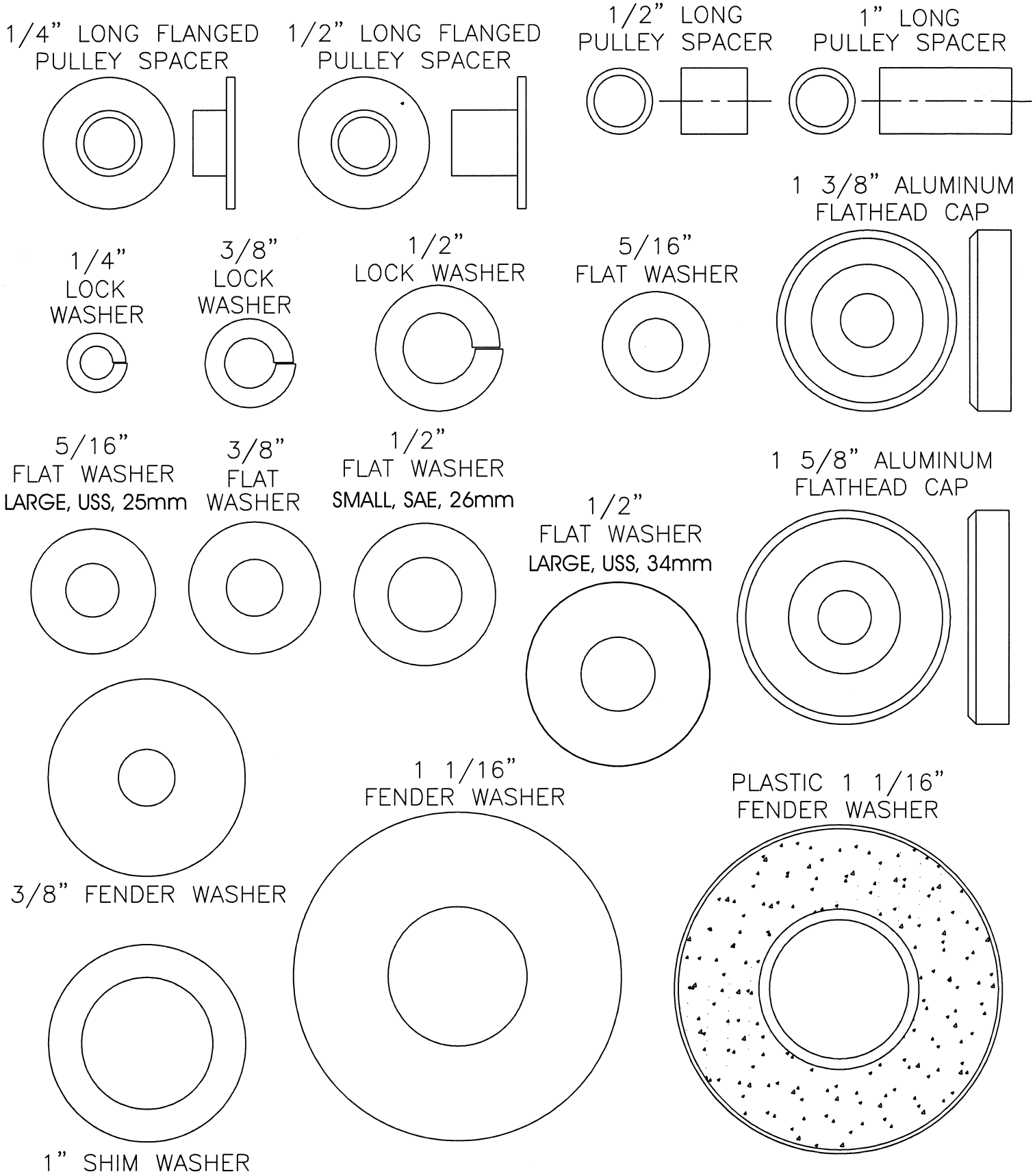

D100

Bicep Curl
Tricep Extension

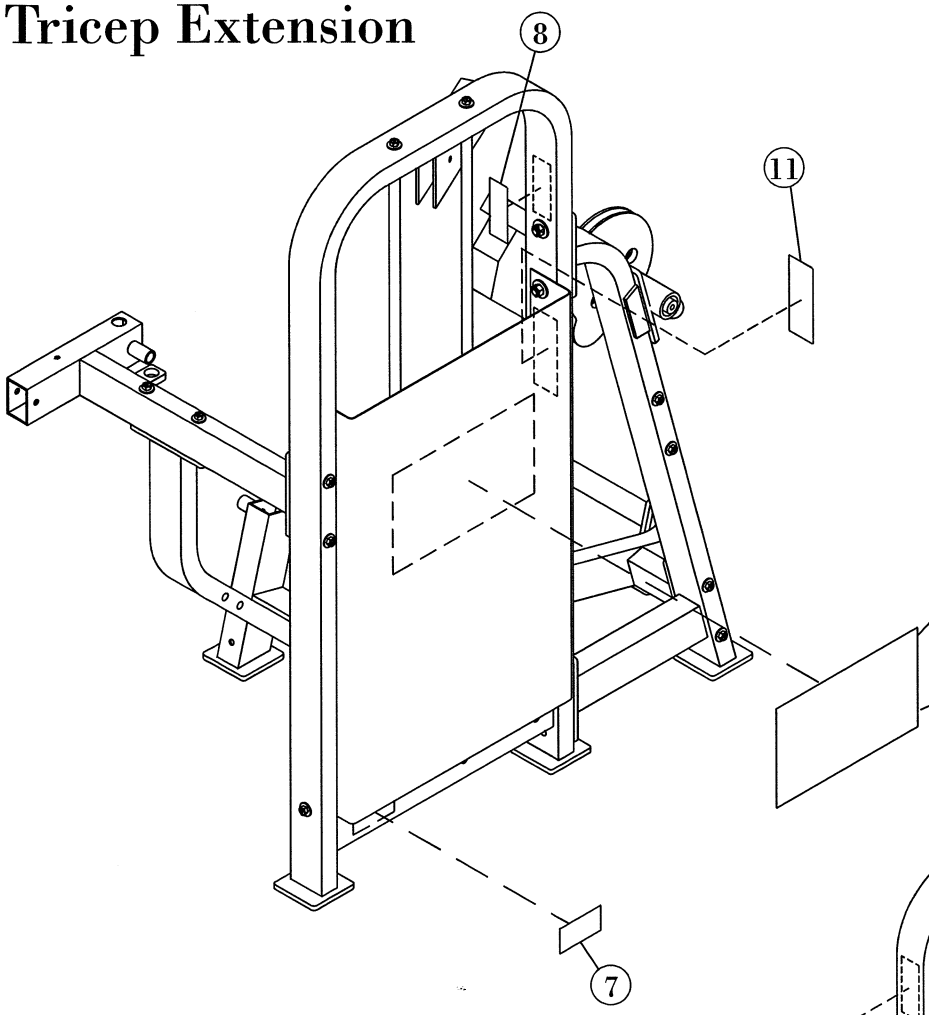

Decal Descriptions

1 - 021-0003031
2 - 021-0003093
3 - 021-0003011
4 - 021-0003057
5 - 021-0003051
6a - 021-0004026
6b - 021-0004027
7 - 021-0012004
8 - 021-0003105
9 - 021-0013021
10 - 021-0003104
11 - 021-0003279

6a On white or light color frames

6b On black or dark color frames

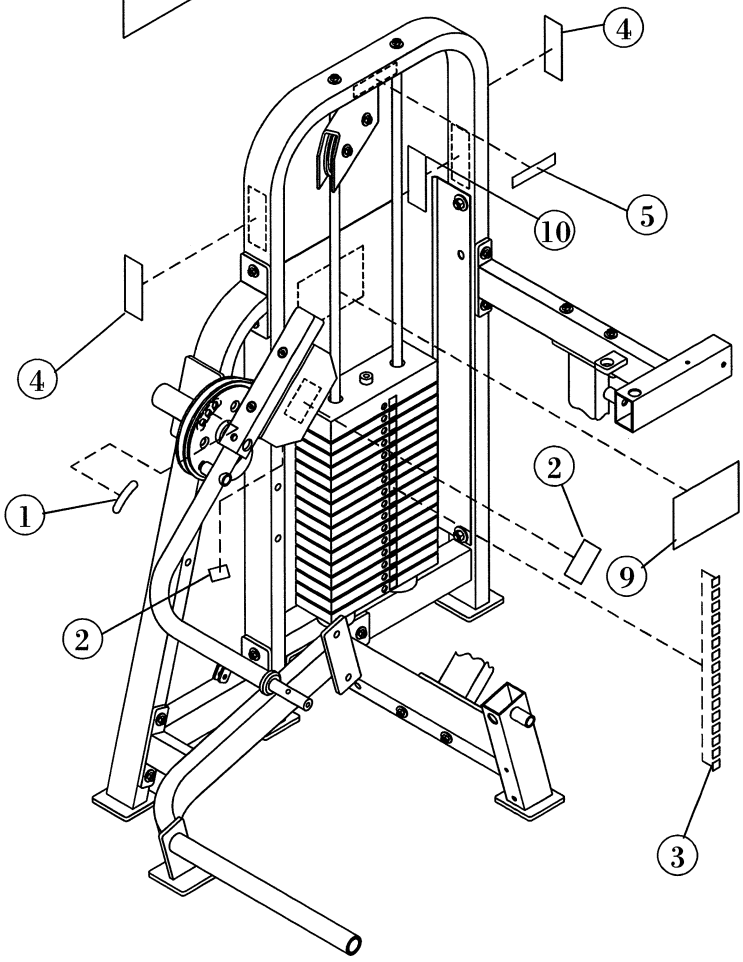

D100

Bicep Curl
Tricep Extension

021-0004084

021-0003011

DUAL 100 WEIGHT CHART

SELECTED WEIGHT (Lbs)		Biceps Curl	ACTUAL WEIGHT LIFTED (Lbs)
		Triceps Extension	
29	(29) 1	10	14
42	(12 ½) 2	15	21
54	(12 ½) 3	19	27
67	(12 ½) 4	23	34
79	(12 ½) 5	28	40
92	(12 ½) 6	32	46
104	(12 ½) 7	36	52
117	(12 ½) 8	41	59
129	(12 ½) 9	45	65
142	(12 ½) 10	50	71
154	(12 ½) 11	54	77
167	(12 ½) 12	58	84
179	(12 ½) 13	63	90
192	(12 ½) 14	67	96
204	(12 ½) 15	71	103
217	(12 ½) 16	76	109

NOTE: The chart above shows the standard weight stack for this unit, this chart does not represent any incremental add on weights. The weights listed are approximate and have been rounded off to the nearest pound. Hoist reserves the right to modify the weight stack from the one shown without prior notice.

021-0003279

D100

Bicep Curl

Tricep Extension

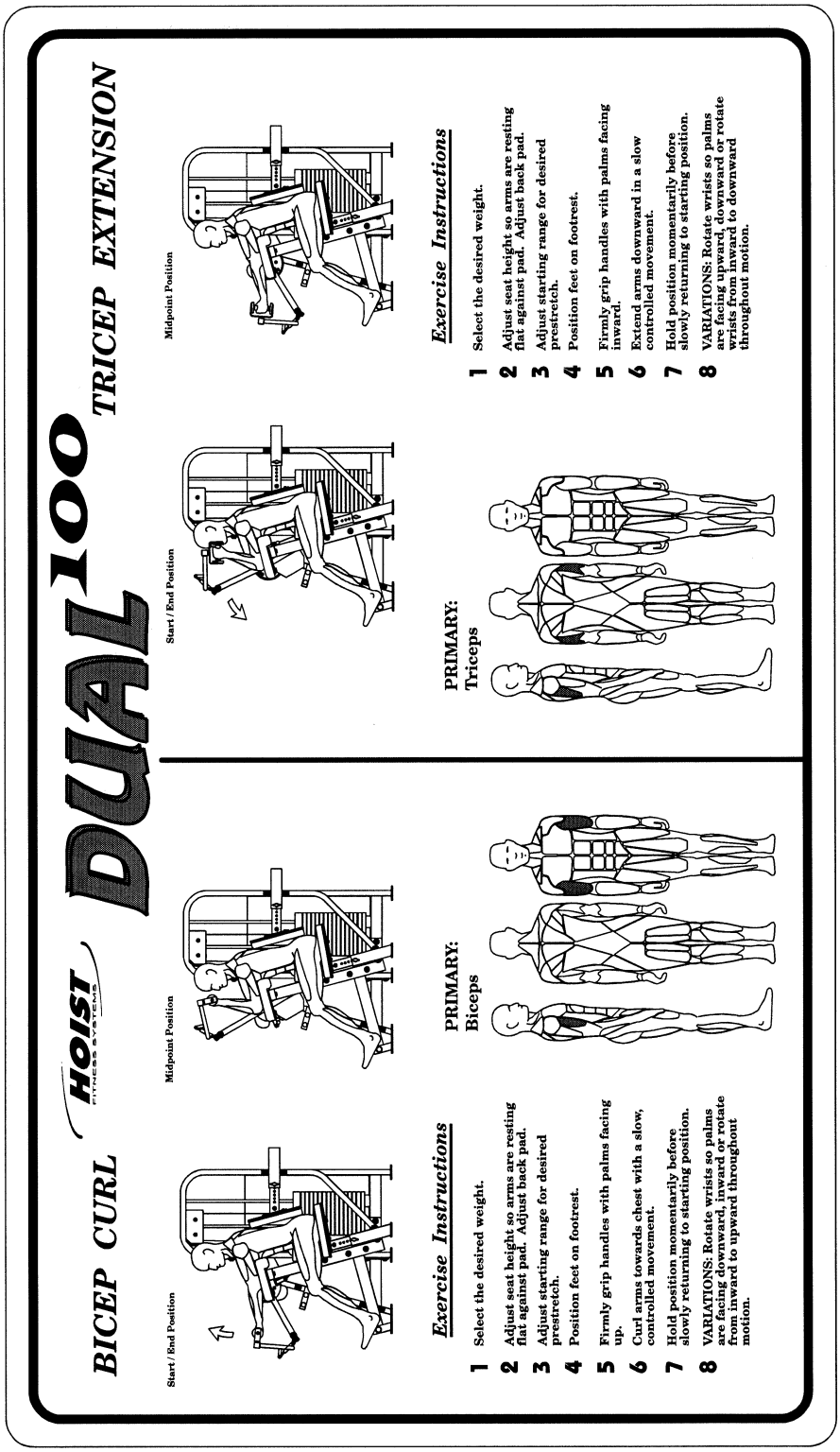

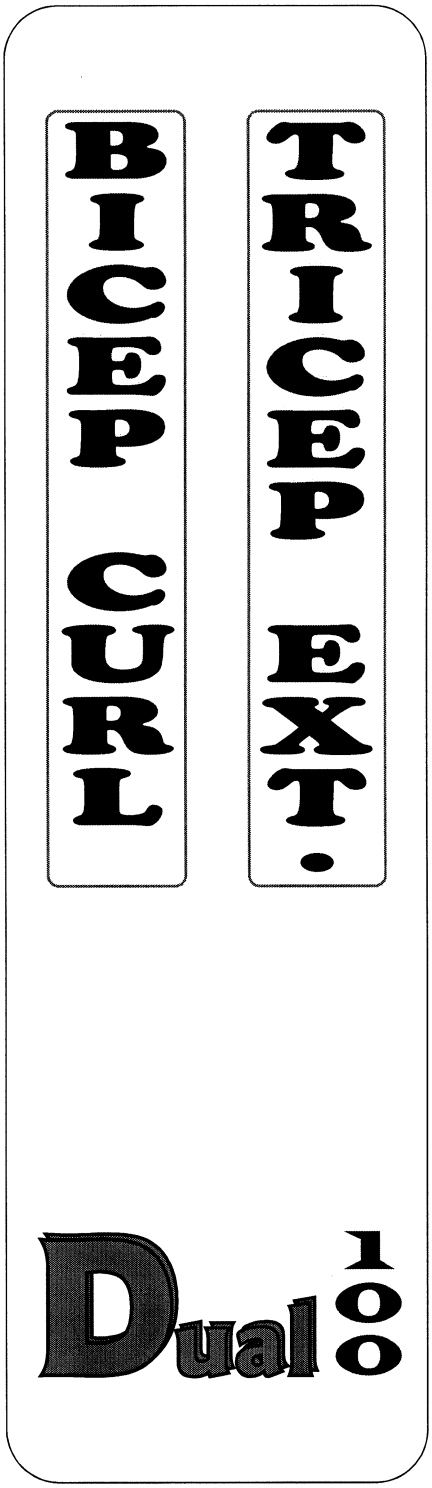

021-0013021

021-0003057

D100

Bicep Curl

Tricep Extension

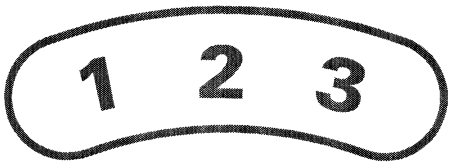

021-0003031

021-0003093

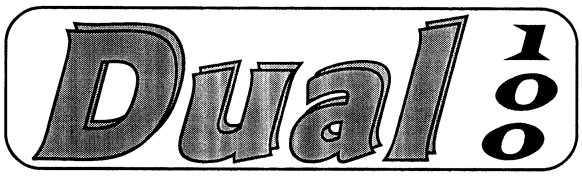

021-0003051

NOTICE

COMMERCIAL MAINTENANCE	Daily	Weekly	Monthly	6 Months	Yearly
Inspect; Links, Pull Pins, Snap Locks, Swivels, Weight Stack Pins	X				
Clean; Upholstery	X				
Inspect; Cables or Belts and their tension	X				
Inspect; Accessory Bars and Handles		X			
Inspect; All Decals		X			
Inspect; All nuts and Bolts Tighten if Needed.		X			
Inspect; Anti-Skid Surfaces		X			
Clean & Lubricate; Guide Rods with a Teflon (PTFE) based lubricant (Superlube)			X		
Lubricate; Seat Sleeves, Turcite Bushings, Linear Bearing			X		
Clean & Wax; All Glossy Finishes				X	
Repack with Grease Linear Bearings				X	
Replace; Cables, Belts and Connecting Parts.					X

021-0003104

WARNING

USE ONLY GENUINE HOIST REPLACEMENT PARTS. FAILURE TO DO SO WILL VOID WARRANTY AND COULD RESULT IN PERSONAL INJURY OR EVEN DEATH. THERE IS A RISK ASSUMED BY INDIVIDUALS WHO USE THIS TYPE OF EQUIPMENT. TO MINIMIZE THE RISK ALWAYS FOLLOW THESE SIMPLE RULES.

1. READ & UNDERSTAND ALL ENCLOSED INSTRUCTIONS before using this equipment.

2. INSPECT EQUIPMENT BEFORE EACH USE. Replace all parts at the first signs of wear or damage. If in doubt about a certain part, DO NOT use the equipment until the part is replaced. Failure to replace worn or damaged parts may result in injury.

3. FOLLOW ROUTINE MAINTENANCE SCHEDULE

4. CONSULT YOUR PHYSICIAN BEFORE STARTING ANY EXERCISE PROGRAM. Warm up properly before engaging in weight resistence training. Stop exercising if you feel faint or dizzy.

5. TO PREVENT THE POSSIBILITY OF SERIOUS INJURY, KEEP CLEAR OF ALL MOVING PARTS. Do not attempt to free any jammed part by yourself. Obtain assistance in order to avoid possible injury.

6. Take your time and do not rush the exercise. Practice proper breathing, NEVER hold your breath.

7. CHILDREN SHOULD NOT BE ALLOWED TO USE THIS EQUIPMENT. To avoid possible injury, children should be kept at a safe distance when this equipment is in use. Teenagers should not use this equipment without adult supervision.

8. CALL YOUR AUTHORIZED DISTRIBUTOR if you have any questions on the proper use or maintenance of this equipment.

021-0003105

D100

Bicep Curl
Tricep Extension

021-0004027

021-0004026

D100

Bicep Curl

Tricep Extension WEIGHT RATIOS

	100%	48%	35%
1	25	12	8.75
2	37.5	18	13.13
3	50	24	17.5
4	62.5	30	21.88
5	75	36	26.25
6	87.5	42	30.63
7	100	48	35
8	112.5	54	39.38
9	125.0	60	43.75
10	137.5	66	48.13
11	150.0	72	52.5
12	162.5	78	56.88
13	175.0	84	61.25
14	187.5	90	65.63
15	200.0	96	70
16	212.5	102	74.38

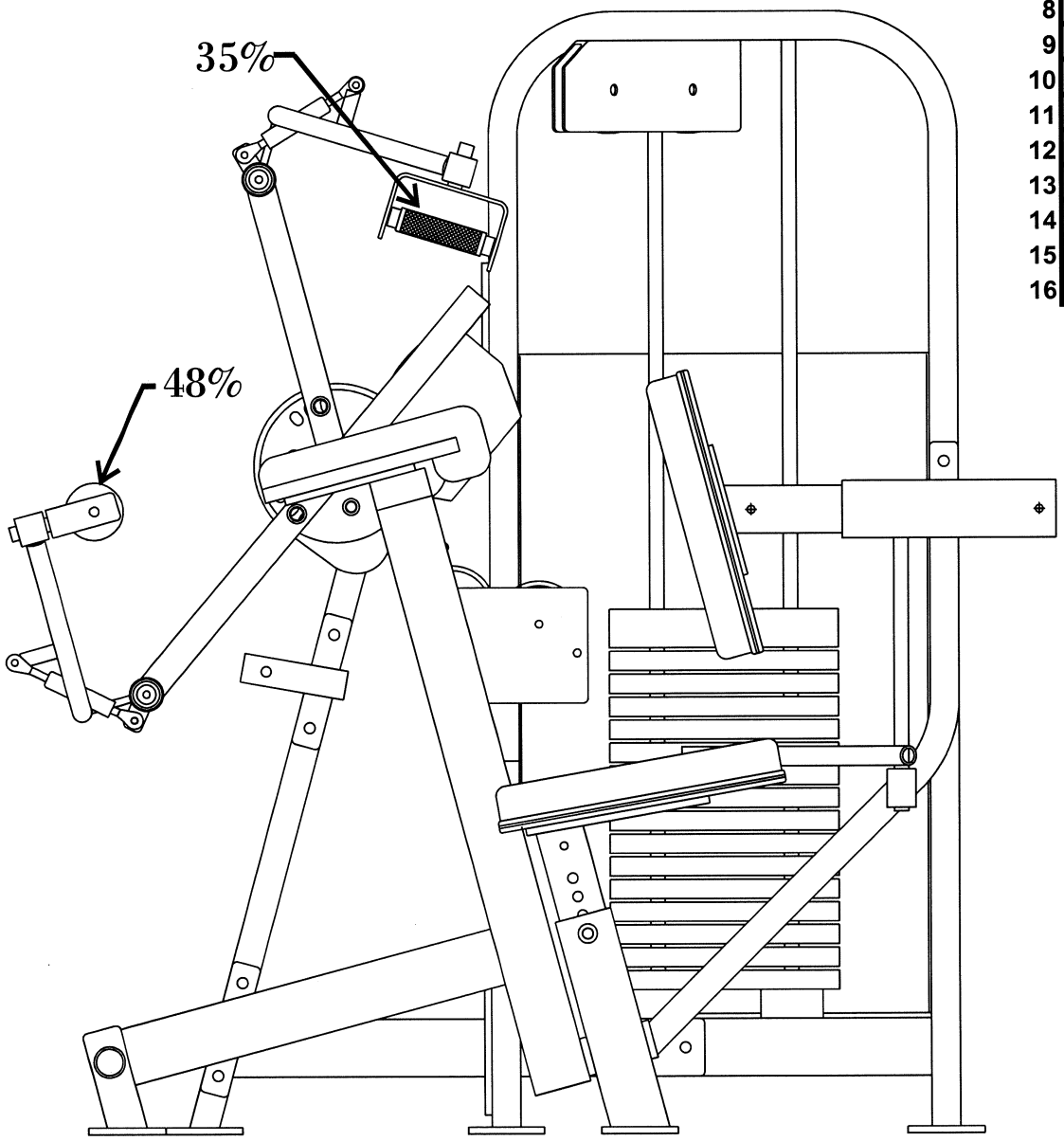

The above chart shows the actual weight you are lifting when the ratios are applied. To find the actual weight you are lifting you would come down from the ratio being used and across from the number of the weight plate you have pinned.

WEIGHT TRAINING TIPS

Always consult your physician before starting any exercise program.

Hoist equipment is designed to maximize your time spent working out. Having an exercise routine planned out in advance will allow you to get the most benefit out of the time spent exercising, and will also enable you to work all the major muscle groups.

Warm up properly before engaging in weight resistance training. Stretching, yoga, jogging, calisthenics or other cardiovascular exercise can help prepare your body for the heavier workload of lifting weights.

Learn how to perform the exercise correctly before using heavy weight. Correct form is important to avoid injury and to ensure that you work the proper muscle groups.

Know your limitations. If you are new to weight training or are embarking on an exercise regimen after a long layoff, start slowly and build foundational strength over a longer period of time.

Pay attention to your breathing. Exhale when you exert is a general rule of thumb. Never hold your breath.

D100

Bicep Curl
Tricep Extension

Weight Training Exercise Log

S=Sets R=Repetition per set W=Weight used

Date																																										
Exercise	S	R	W	S	R	W	S	R	W	S	R	W	S	R	W	S	R	W	S	R	W	S	R	W	S	R	W	S	R	W	S	R	W	S	R	W	S	R	W	S	R	W
Totals																																										

HOIST FITNESS SYSTEMS
GENERAL MAINTENANCE INFORMATION

Links, Pull-Pins, Snap Locks, Swivels, Weight Stack Pins:

* *Check all pieces for signs of visible wear or damage.*

* *Check springs in snap hooks and pull-pins for proper tension and alignment.*

* *If the spring sticks or has lost its rigidity, replace it immediately.*

Upholstery:

* *To ensure prolonged upholstery life and proper hygiene, all upholstered pads should be wiped down with a damp cloth after every workout.*

* *Periodically take the time to use a mild soap or an approved vinyl upholstery cleaner to deter the onset of cracking or drying. Avoid using any abrasive cleaners or cleaners not intended for use on vinyl.*

* *Replace ripped or worn upholstery immediately.*

* *Keep sharp or pointed objects clear of all upholstery.*

Guide Rods:

* *Wipe clean with a clean, dust free rag.*

* *If lubrication is required, lube with Waylube Oil ONLY or damage to the Top Weight Bearing may occur.*

* *DO NOT repeatedly clean the shafting with alcohol or any other stripping cleanser! The Top Weight Bearing transfers a gliding material to the guide rods. Cleaning other than wiping with a clean, dust free rag will remove the previously transferred material and increase the wear to the Bearing Liner.*

Decals:

* *Inspect and familiarized yourself with any safety warnings or other user information posted on each decal.*

Nuts and Bolts:

* *Inspect all nuts and bolts for any loosening and tighten if needed.*

* *Go through a re-tightening sequence periodically to ensure that all hardware is tensioned properly.*

Belts and Cables:

* *Hoist uses only high quality belts, and mil-spec cables.*

* *Visually inspect the belts and cables for fraying, cracking, peeling or discoloration.*

* *While the machine is not in use, carefully run your fingers along the belt or cable to feel for thinning or bulging areas.*

* *Replace belts and cables immediately at the first signs of damage or wear. Do not use equipment until belts or cables have been replaced.*

Continued: GENERAL MAINTENANCE INFORMATION

Belt and Cable Tension:

* *Referring to the Assembly/Owners Manual, when belts or cables are used check all bolts and attachments to be sure they are properly attached.*

* *Check slack in belts or cables and readjust tension if needed.*

Seat Sleeves & Oilites:

* *Wipe down adjusting tubes with a dust free rag before applying lubricant.*

* *Lubricate seat sleeves and oilites with a silicon or Teflon based lubricant spray.*

Linear Bearings:

* *Referring to the Assembly/ Owners manual carefully dis-assemble the bearing from its housing and place a finger full of light grease (lithium, super lube, etc.) into the inside of the bearing. Using your finger, press the grease into the ball-bearings and their tracks. Repeat until the ball-bearing tracks are full of grease. Insert the shaft back into the bearing and wipe off excess grease.*

Anti-Skid Surfaces:

* *These surfaces are designed to supply secure footing and need to be replaced if they appear worn or become slippery.*

PLEASE KEEP THIS FOR YOUR RECORDS.

D100
Bicep Curl
Tricep Extension

MAINTENANCE SCHEDULE

ROUTINE	*COMMERCIAL MAINTENANCE*	*HOME MAINTENANCE*	*LATEST DATE ENTRY*							
Inspect; Links, Pull Pins, Snap Locks, Swivels, Weight Stack Pins	DAILY	WEEKLY								
Clean; Upholstery	DAILY	WEEKLY								
Inspect; Cables or Belts and their tension	DAILY	WEEKLY								
Inspect; Accessory Bars and Handles	WEEKLY	3 MONTHS								
Inspect; All Decals	WEEKLY	3 MONTHS								
Inspect; All Nuts and Bolts, Tighten if Needed	WEEKLY	3 MONTHS								
Inspect; Anti-Skid Surfaces	WEEKLY	3 MONTHS								
Clean & Lubricate; Guide Rods with a Teflon (PTFE) based lubricant (Superlube)	MONTHLY	3 MONTHS								
Lubricate; Seat Sleeves, Turcite Bushings, Linear Bearing	MONTHLY	3 MONTHS								
Clean and Wax; All Glossy Finishes	6 MONTHS	YEARLY								
Repack with Grease; Linear Bearings	6 MONTHS	YEARLY								
Replace; Cables, Belts and Connecting Parts	YEARLY	3 YEARS								

Your equipment comes with a commercial maintenance decal.
For personal, in home use, please follow the home maintenance schedule listed above.

D100
Bicep Curl
Tricep Extension

HOIST FITNESS SYSTEMS
LIMITED LIFETIME WARRANTY

Hoist Fitness Systems warrants this product to the **original purchaser** to be free from defects in workmanship and/or materials under normal use or service. If at any time a component part is defective, Hoist Fitness Systems shall repair or replace it (at Hoist Fitness Systems option) within a reasonable period of time. This warranty does not cover costs of removal. transportation or reinstallation. This warranty shall not apply if the defect was caused by misuse, neglect or normal wear and tear.

Starting from the original date of purchase, normal wear and tear shall be considered as the following:

COMMERCIAL USE: All malfunctions of upholstery, grips, paint, and chrome that occur after 180 days; all malfunctions of electronic components, belts or cables that occur after one year; all malfunctions of pulleys, bearings, or bushings that occur after five years. The frame and all welded components are warranted for the life of the product.

IN HOME USE: All malfunctions of grips, paint, and chrome that occur after one year; all malfunctions of electronic components, belts or cables, and upholstery that occur after three years; all malfunctions of pulleys, bearings, or bushings that occur after five years. The frame and all welded components are warranted for the life of the product.

Hoist Fitness Systems sole responsibility shall be to repair or replace the component within the terms stated above. Hoist Fitness Systems shall not be liable for any loss or damage of any kind including any incidental or consequential damages resulting, directly or indirectly from any warranty expressed or implied or any other failure of this product.

WHAT IS NOT COVERED BY THIS WARRANTY

Hoist's sole obligation under this warranty is limited to either repair or replacement of parts, subject to the additions below. This warranty neither assumes nor authorizes any person to assume obligations other than expressly covered by this warranty.
NO CONSEQUENTIAL DAMAGES. Hoist is not responsible for economic loss; profit loss; or special, indirect, or consequential

WARRANTY IS NOT TRANSFERABLE. This warranty is not assignable and applies only in favor of the original purchaser/user to whom delivered. Any such assignment or transfer shall void the warranties herein made and shall void all warranties, expressed, implied or statutory, except the one (1) and (5) year warranty described above. These warranties are exclusive and in lieu of all other warranties, including implied warranty and merchantability or fitness for a particular purpose. There are no warranties which extend beyond the description on the face hereof.

ALTERATION, NEGLECT, ABUSE, MISUSE, NORMAL WEAR & TEAR, ACCIDENT, DAMAGE DURING TRANSIT OR INSTALLATION FIRE, FLOOD, ACTS OF GOD . Hoist is not responsible for the repair or replacement of any parts that Hoist determines have been subjected after the date of manufacture to alteration, neglect, abuse, misuse, normal wear & tear, accident, damage during transit or installation, fire, flood, or an **ACT OF GOD.**

TRANSPORTATION COSTS. Hoist will accept parts covered under this warranty freight collect, provided that shipment has received prior approval. Hoist is not responsible for any other transportation costs, but will ship freight collect parts either repaired or replaced under these warranties.

WARRANTY CLAIMS. All claims should include: model number, the serial number, proof of purchase, date of installation, and all pertinent information supporting the existence of the alleged defect.

Hoist Fitness Systems
9990 Empire St. #130
San Diego, Calif. 92126
(800)548-5438

Web Site - www.hoistfitness.com

PLEASE KEEP THIS FOR YOUR RECORDS